Unit 4: Chemical Changes (Higher Content)

Metals react with oxygen to produce **metal oxides**.

E.g. Copper + Oxygen —> Copper Oxide

The reactions are **oxidation** reactions because the metals gain oxygen.

Reactivity of Metals

Potassium — most reactive
Sodium
Calcium
Magnesium
Aluminium
Carbon
Zinc
Iron
Tin
Lead
Hydrogen
Copper
Silver
Gold
Platinum — least reactive

- When metals react with other substances the metal atoms form positive ions.
- The reactivity of a metal is related to its tendency to form positive ions.
- Metals can be arranged in order of their reactivity in a "reactivity series" based on how they react with water, oxygen and dilute acids.

Group of Metals	Reaction with Oxygen	Reaction with Water	Reaction with Dilute Acid
Potassium, Sodium, and Calcium	Oxidise and stop being shiny in a matter of seconds	Quickly react, releasing hydrogen gas. May **ignite**.	Violent and dangerous
Magnesium and Aluminium	Quick reaction when heated	Very slow reaction with cold water	Moderate reaction, releasing bubbles of hydrogen
Zinc, Iron, Tin and Lead	No visible reaction in short term	No visible reaction with cold water	Slow reaction, releasing hydrogen
Copper, Silver, Gold and Platinum	No reaction in short term	No reaction	No reaction

A more reactive metal can **displace** a less reactive metal from a compound.

E.g. Ca + ZnO —> CaO + Zn (The calcium **displaces** the zinc)

Metal Extraction

Metals can be split into three groups, based on how easy to extract them it is.

1. The most unreactive metals (e.g. gold) are found **native** (as an unreacted element) in the Earth's crust.
2. Metals **less reactive than carbon** can be extracted by **reduction** with carbon. This is a special example of a displacement reaction

   E.g. Iron oxide + Carbon —> Iron + Carbon dioxide

3. Metals **more reactive than carbon** may require **electrolysis** to extract them. This is **expensive** and needs a lot of **energy**.

The pH scale

- The pH scale is a measure of acidity, ranging from 0 (extremely acidic) to 14 (extremely alkaline).
- Acidic solutions produce **hydrogen (H^+)** ions.
- Alkaline solutions produce **hydroxide (OH^-)** ions.
- A solution with pH 7 is neutral.
- pH can be measured using **indicators** (e.g. universal indicator) or a **pH probe** (a detector attached to a computer).
- An indicator is a chemical that changes colour in response to differences in pH
- Universal indicator is **red** in acids, **blue** in alkalis and **green** in neutral solutions.

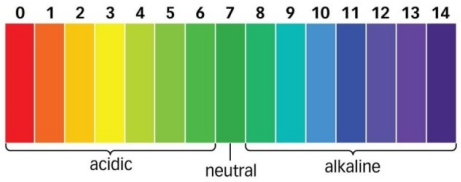

Unit 4: Chemical Changes (Higher Content)

Salts

Salts are ionic compounds. They can be formed by the reaction of acids with metals, metal oxides and carbonates. They are named according to the acid, and the **positive ion** in whatever it is reacting with.

- **Hydrochloric acid** (HCl) reacts to make **chloride** salts
  E.g. Zinc + Hydrochloric Acid —> Zinc chloride + Hydrogen
- **Sulfuric acid** (H_2SO_4) reacts to make **sulfate** salts
  E.g. Iron + Sulfuric Acid —> Iron sulfate + Hydrogen
- **Nitric acid** (HNO_3) reacts to make **nitrate** salts
  E.g. Tin + Nitric Acid —> Tin nitrate + Hydrogen

(These are the three lab acids you need to know about).

Making a named soluble salt

Soluble salts are those that can dissolve. To produce a pure **dry** sample, you may need to carry out **crystallisation**.

1. React an appropriate solid (e.g. metal or metal oxide) with an appropriate acid.
   If the metal is unreactive, this may require gentle heating of the acid.
2. **Filter** using a funnel and filter paper to remove any **excess** solid.
3. Transfer to an **evaporating basin** and gently heat with a Bunsen or water bath to remove water.

Reactions of Acids with Metals

Metals react with acids to form a **Salt** and Hydrogen gas

Metal + Acid —> Salt + Hydrogen (Just remember MASH!)

E.g. Zinc + Nitric Acid —> Zinc nitrate + Hydrogen

Reactions of Acids with Metal Oxides

Metals oxides react with acids to form a **Salt** and water

Metal Oxide + Acid —> Salt + Water

E.g. Lithium Oxide + Sulfuric Acid —> Lithium Sulfate + Water

Reactions of Acids with Metal Carbonates

Metals carbonates react with acids to form a **Salt** and water

Metal Carbonate + Acid —> Salt + Carbon Dioxide + Water

E.g. Tin Carbonate + Hydrochloric Acid —> Tin Chloride + Carbon Dioxide + Water

Neutralisation

- A **neutralisation** reaction moves the pH closer to 7.
- A neutralisation reaction between an acid and an alkali produces a salt and water.
- The water is formed from the H^+ ions in the acid and the OH^- ions in the alkali.
- The name of the salt comes from the **positive ions** in the alkali and the name of the acid.

E.g. Sodium hydroxide + Hydrochloric acid —> Sodium chloride + Water

- It can also be partially represented by the equation:

$$H^+(aq) + OH^-(aq) \longrightarrow H_2O(l)$$

Unit 4: Chemical Changes (Higher Content)

Electrolysis

- Electrolysis is the splitting of an ionic compound using electricity.
- It can only be done when the ions in the compound are free to move.
- This happens if the compound is **melted** or **dissolved**. (Look out for state symbols in the question).
- When the ions turn back into atoms we say they have been **discharged**.

Electrolytes

- The liquid or solution being **electrolysed** is called the **electrolyte**.
- It will be made of the ions that made up the compound. E.g. if the compound is copper chloride, there will be Cu^+ ions and Cl^- ions.

Equipment and Process

Electrolysis takes different forms, but always involves the use of a power source and positive and negative electrodes to separate the positive and negative ions in an electrolyte.

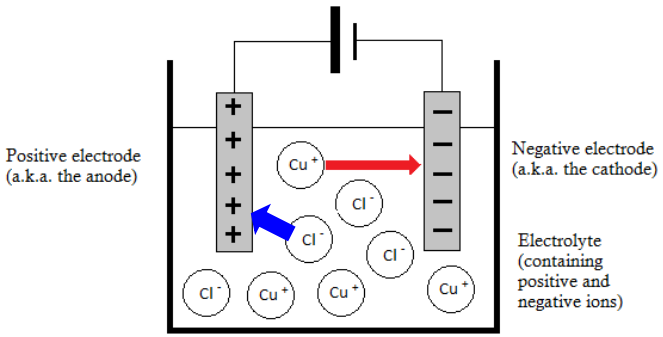

The electrodes should be made of an **inert** material e.g. graphite to stop them reacting.

When current is flowing, the **positive metal** ions will move to the **negative electrode** because **opposites attract**. The **negative non-metal** ions will move to the **positive electrode** for the same reason.

Oxidation and Reduction

When an atom or ion **gains** electrons, this is called **reduction**.
E.g. At the negative electrode, a copper ion picks up electrons and turns back into an atom.

$$Cu^{2+} + 2e^- \longrightarrow Cu$$

When an atom or ion **loses** electrons this is called **oxidation**
E.g. At the positive electrode, two chlorine ions both lose one electron each and form a chlorine molecule.

$$2Cl^- \longrightarrow Cl_2 + 2e^-$$

To remember which is which, think OILRIG. Oxidation is Loss. Reduction is Gain.

Products of Electrolysis

For a **molten** compound the products are the two elements in the compound. E.g. Lead bromide, when electrolysed, makes **Lead** and **Bromine**. The metal always forms at the **negative cathode**. The non-metal forms at the **positive anode**.

In a **solution** (dissolved substance) it's slightly more complicated, because water contains H^+ and OH^- ions.
If the **metal** in the compound is less reactive than Hydrogen (so Copper, Silver, Gold or Platinum) then the metal will be formed. If it's **more** reactive than Hydrogen then Hydrogen will be formed.
At the **positive** electrode, if the compound contains a halogen (e.g. Fluorine, Chlorine, Bromine) that will be formed. Otherwise, Oxygen is formed.

Electrodes

To remember the names of the electrodes, think PANIC: Positive Anode. Negative is Cathode.

Unit 4: Chemical Changes (Higher Content)

Using Electrolysis to Extract Metals

Electrolysis is very useful for extracting metals but it's expensive to do. It is usually only used for **reactive** metals (that cannot be extracted using **reduction** with **carbon**), or to extract expensive metals from low-quality ores (e.g. **copper**).

Costs

Electrolysis is expensive due to:

- The cost of the energy to melt the compound
- The cost of the electricity to split the compound
- The cost of the electrodes, which gradually wear away over time, and must be continuously replaced.

Electrolysis of solutions

Sodium chloride solution is electrolysed to produce hydrogen gas, chlorine gas (which is used to make bleach and plastics) and sodium hydroxide solution (which is used to make soap).

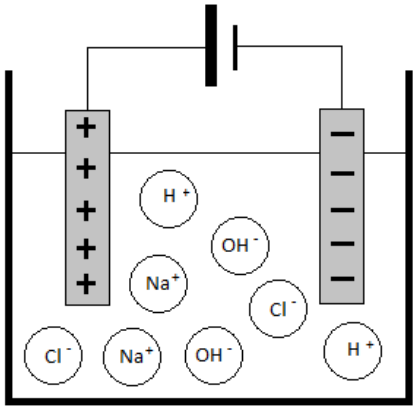

The sodium chloride solution contains:

- Sodium ions (Na^+)
- Chloride ions (Cl^-)
- Hydrogen ions (H^+)
- Hydroxide ions (OH^-)

Both positive ions move to the negative electrode, but the **less reactive** hydrogen is discharged.

Both negative ions move to the positive electrode, but the **halogen** (chlorine) is discharged) .

Extraction of aluminium

- Aluminium is a very useful metal. It is extremely lightweight and strong. Although it is highly reactive, it rapidly forms a coating of aluminium oxide, which is strong and protects it from further reactions.
- Aluminium is extracted from a molten mixture of **aluminium oxide** (Al_2O_3) and **cryolite**. The cryolite is added to **lower the melting point** of the aluminium oxide. This means less energy is needed to melt it before electrolysis can begin.

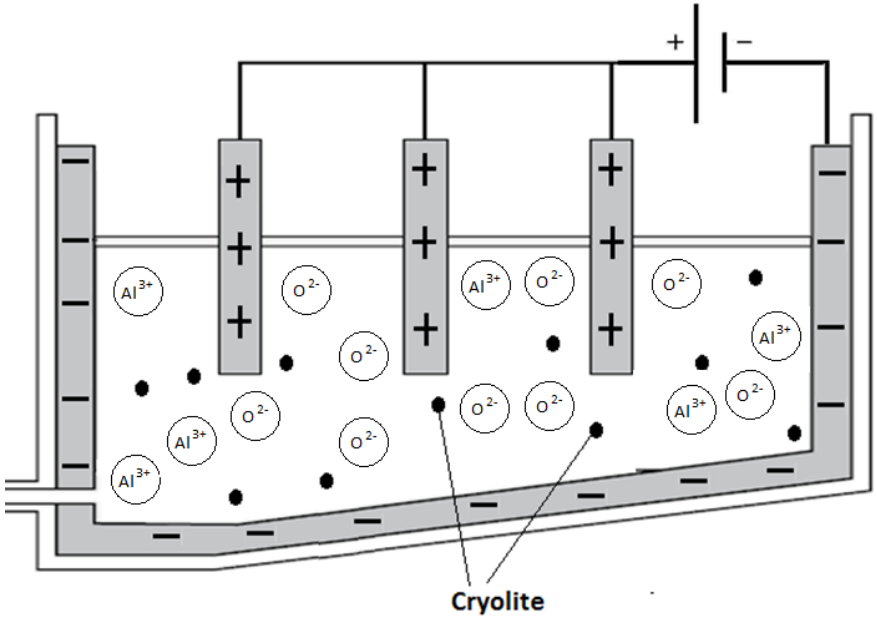

- In the extraction process, the **cathode** is actually the reaction container. Every aluminium ion moves towards this, and is **reduced** when it picks up 3 electrons and turns back into an atom. This means a layer of **molten aluminium metal** forms at the bottom of the container and can be removed using a tap.

$$Al^{3+} + 3e^- \longrightarrow Al$$

- Oxygen forms at the **anode**, and the hot gas reacts with the **carbon** electrodes, wearing them away and forming carbon dioxide.

Unit 4: Chemical Changes (Higher Content)

Strong and weak acids

Acids all release H^+ ions when they are dissolved in water. This is called being "in an aqueous solution"

Some acids like hydrochloric acid (HCl) fully ionise to release H^+ ions extremely easily. These are called **strong acids**.

Other examples of strong acids are nitric acid and sulfuric acid.

Some acids like ethanoic acid (CH_3COOH) are only partially ionised in aqueous solution. This means that some of the particles will split up (to make CH_3COO^- and H^+) but some of them will remain as CH_3COOH. These are called **weak acids**.

Other examples of weak acids are citric acid and carbonic acid.

Strong vs Concentrated

A strong acid (which fully ionises in water) is different to a concentrated acid (where lots of the acid has been dissolved in a small amount of solvent).

A weak acid will have a higher (less acidic pH) than a strong acid of the same concentration.

pH and acids

The pH scale is a logarithmic scale. As pH decreases by one unit, the hydrogen ion concentration of the solution increases by a factor of 10.

This means that a solution with pH 4 has 10 times more H^+ ions in it than a solution with pH 5, and 100 times more H^+ ions that a solution with pH 6.